OPERATING MANUAL

Air heater type XS, S, M, L, XL, PN10

This operating manual must be available to the operating personnel at all times. Read the operating instructions carefully before use and keep for further reference.

APPLICATION

Air heaters are modular units which create process heat in industrial environments.

Type XS

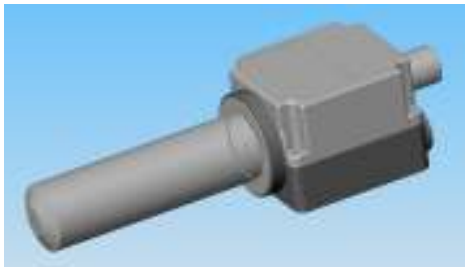

Type S

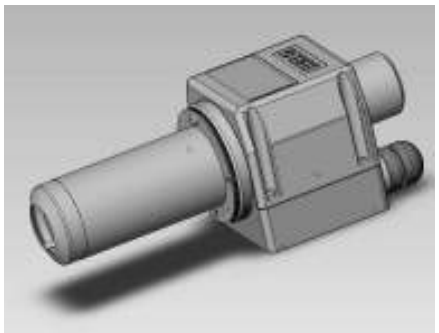

Type M

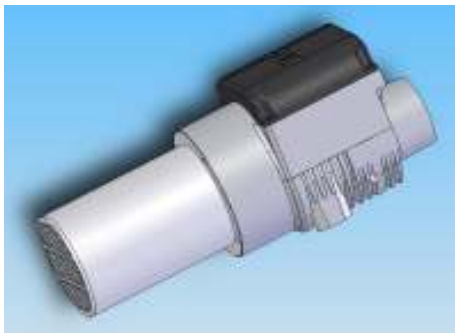

Type L/XL

SECURITY WARNING

Danger to life when opening the air heater, as live components and connections are exposed. The device must be *fully* disconnected from the mains before opening. Electric work shall only be operated by qualified personnel (according to TRBS 1203).

Risk of fire and explosion if air heaters are installed and used incorrectly, particularly near flammable materials and explosive gases. Not suitable for hazardous locations! The minimal air flow must not be undercut.

Danger of burns! Do not touch the element housing and nozzle when HOT, let the tool cool down. Do not point the hot air flow in the direction of people or animals.

The mains voltage specified on the device's type plate must correspond to the mains voltage. Air heaters with a fix connection must be connected to a separator (e.g. mains switch).
Special connecting conditions Zmax = 0.039Ω + j 0.025Ω for short time rating (30 min.)
according to IEC/EN 61000-3-11; Zmax = 0.026Ω + j 0.016Ω for continuous operation
Consult your local electricity board if necessary.

Device in protection class I should be earthed using a protective conductor.

Device in protection class II

The device must be supervised when in operation. The heat can reach flammable materials that are out of view.

Protect the tool from damp and wet!

TECHNICAL DATA

Type XS:

Technical data	Air heater	XS20-450TC	XS20-800TC		XS20-1000TC		XS20-1500TC		XS20-2000TC	
Voltage	VAC	230	120	230	120	230	120	230	120	230
Frequency	Hz	50/60								
Power	kW	0,45	0,8		1,0		1,5		2,0	
Electricity	A	1,7	6,7	3,5	8,4	4,4	12,5	6,5	16,7	8,8
Max. temperature	°C / °F	650 / 1202								
Min. air volume	l/min	30	60		75		100		150	
Max. pressure	bar	6,0								
Thermocouple	type	‚K'								
Weight	kg	0.4					0.5			
Air inlets Ø	mm	Push-In plug nipple 6mm								
Blow off opening Ø	mm	M16 inside thread, SW 17								
Dimensions (length x Ø)	mm	289 x 30					346 x 30			
Conformity symbol	CE									
Protection class I	⏚									

Type PN10:

Technical data	Air heater	PN10 - S	PN10 - M		PN10 - XL
Voltage	VAC	230	230	400 (2 Ph)	400 - 440
Frequency	Hz	50/60			
Power	kW	3.3	3.7	4.5	11.8 – 14.3
Electricity	A	14.4	16.1	11.2	17.1 – 18.7
Max. temperature	°C / °F	600 / 1112			
Min. air volume	l/min	420	360	490	950
Max. pressure	bar	10,0			
Weight Ø	kg	4,7	16,5		24,0
Air inlets Ø (female)	inch	½“	1“		2“
Blow off opening (female)	inch	½“	1“		2“
Dimensions (L x W x H)	mm	360x160	442,5 x 285		575 x 340
Conformity symbol	CE				
Protection class I	⏚				

Type S:

Technical data	Air heater	Type S21		Type S32			Type S36		
Voltage	VAC	120	230				120	230	
Frequency	Hz	50/60							
Power	kW	0,55	0,8	1,0	1,55	2,0	2,2	2,3	3,3
Electricity	A	4,6	3,5	4,4	6,7	8,7	18,3	10,0	14,4
Max. temperature	°C / °F	650 / 1202							
Min. air volume	l/min	150	210		230	430	280	420	
Weight	kg	0,3		0,4			0,47		
Air inlets Ø	mm	19							
Blow off opening Ø	mm	13		16			22		
Heating pipe Ø	mm	21		32			36 / 43		
Dimensions (L x W x H)	mm	188 x 69,5 x 58		228 x 69,5 x 58			238 x 69,5 x 58		
Conformity symbol	CE								
Protection class II	⧈								

Type M:

Technical data	Air heater	Type M50				Type M50L	
Voltage	VAC	230		400 (2Ph)	440 (2Ph)	400 – 440 (2Ph)	
Frequency	Hz	50/60					
Power	kW	2,2	3,7	4,5	4,1	4,6 - 5,6	6,1 – 7,4
Electricity	A	9,6	16,2	11,2	9,2	11,5–12,7	15,3-16,8
Max. temperature	°C / °F	650 / 1202					
Min. air volume	l/min	260	360	490	530	600	830
Weight	kg	0,8				0,9	
Air inlets Ø	mm	38					
Blow off opening Ø	mm	30					
Heating pipe Ø	mm	50 / 65					
Dimensions (L x W x H)	mm	239 x 85 x 90				278 x 85 x 90	
Conformity symbol	CE						
Protection class II	⧈						

Type L:

Technical data	Air heater	Type L62				
Voltage	VAC	400 – 440 (2Ph)			400 – 440 (480*)	
Frequency	Hz	50/60				
Power	kW	5,8-7,0	8,6-10,5	9,1-11,0	4,4-5,3(6,3*)	7,6-9,2 (11,0*)
Electricity	A	14,5-15,9	21,6-23,9	22,7-25,0	6,3-7,0 (7,6*)	11,0-12,0 (13,2*)
Max. temperature	°C / °F	700 / 1292				
Min. air volume	l/min	520	600	750	450	710
Weight	kg	2,9				
Air inlets Ø	mm	38				
Blow off opening Ø	mm	55				
Heating pipe Ø	mm	62 / 74				
Dimensions (L x W x H)	mm	355 x 123 x 124				
Conformity symbol	CE					
Protection class I	⏚					

Type XL:

Technical data	Air heater	Type XL92			
Voltage	VAC	400 – 440 (480*)			
Frequency	Hz	50/60			
Power	kW	5,9-7,1 (8,5*)	7,6-9,2 (10,9*)	11,8-14,3 (17,1*)	17,4-21,0 (25,0*)
Electricity	A	8,5-9,4 (10,2*)	10,9-12,0 (13,2*)	17,1-18,7 (20,5*)	25,1-27,6 (30,1*)
Max. temperature	°C / °F	650 / 1202			
Min. air volume	l/min	560	680	950	1480
Weight	kg	3.3			
Air inlets Ø	mm	60			
Blow off opening Ø	mm	84			
Heating pipe Ø	mm	92 / 102			
Dimensions (L x W x H)	mm	330 x 123 x 124			
Conformity symbol	CE				
Protection class I	⏚				

Please ask for special heating elements (power, voltage)!

DEVICE DESCRIPTION

Type XS:

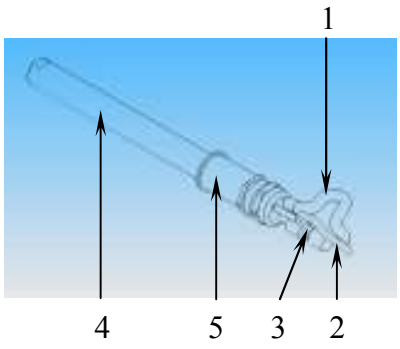

1. Mains connection acc. to type plate
2. Cable thermocouple (type „TC“)
3. Air inlet, push-in plug nipple 6mm
4. Heating pipe M16 IG, SW17
5. Type plate

Connection diagram

Black	L1
Blue	N
Yellow/Green	⏚ Protective conductor
Green (+)	Thermocouple type “K”
White	Thermocouple type “K”

Type PN10:

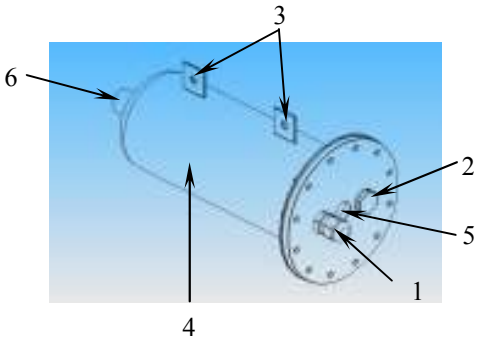

1. Screwed cable gland mains connection
2. Potentiometer (covered up);
   (control cable with external control)
3. Mounting plates
4. Housing
5. Air inlet
6. Blow off opening

Connecting diagram

Type PN10-S and PN10-M 230 VAC:	**Type PN10-M 400 VAC (2Ph):**	**Type PN10-XL 400 VAC:**
L1 → brown N → blue	L1 → brown N → blue	L1 → black L2 → brown L3 → blue
⏚ Protective conductor → yellow/green	⏚ Protective conductor → yellow/green	⏚ Protective conductor → yellow/green

Type S:

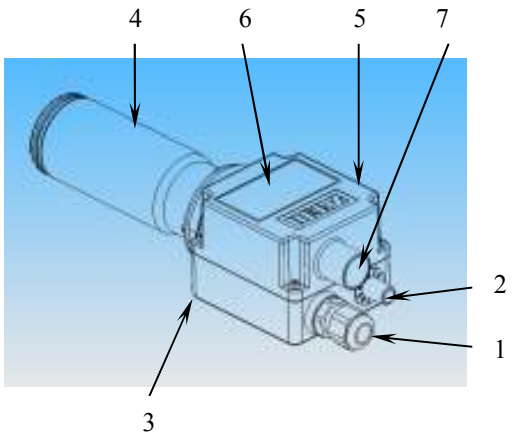

1. Screwed cable gland mains connection
2. Potentiometer 0-8 (control cable with external control (PWM 10 – 24VDC, max. cycle time 1 second)) (no potentiometer in devices without electronics)
3. Mounting on underside of housing M 4 (useful thread length 7 mm)
4. Heater tube
5. Cover
6. Type plate
7. Air inlet

Connecting diagram

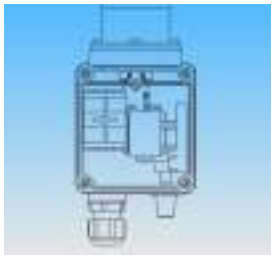	**Standard with Poti** N, L1 = Mains connection acc. to type plate (11mm of insulation from wire ends)		**Type without electronics** N, L1 = Mains connection acc. to type plate (11mm of insulation from wire ends)

Type M:

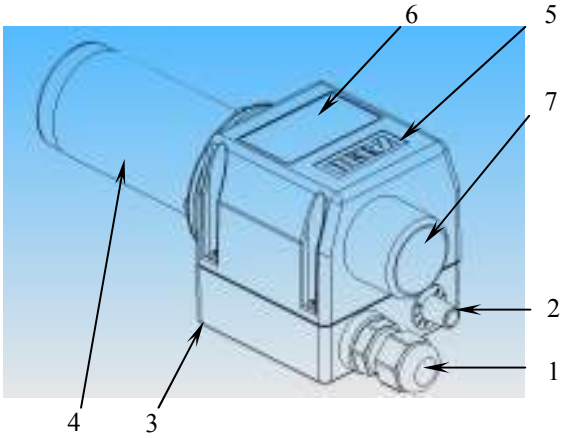

1. Screwed cable gland mains connection
2. Potentiometer 0-8 (control cable with external control (PWM 10 – 24VDC, max. cycle time 1 second)) (no potentiometer in devices without electronics)
3. Mounting on underside of housing M 4 (useful thread length 7 mm)
4. Heater tube
5. Cover
6. Type plate
7. Air inlet ø 38mm

Connecting diagram

	**Standard with Poti** N, L1 = Mains connection acc. to type plate (11mm of insulation from wire ends)		**Type witout electronics** N, L1 or L1, L2 or L1, L2, L3 = Mains connection acc. to type plate (11mm of insulation from wire ends)

Type L and XL:

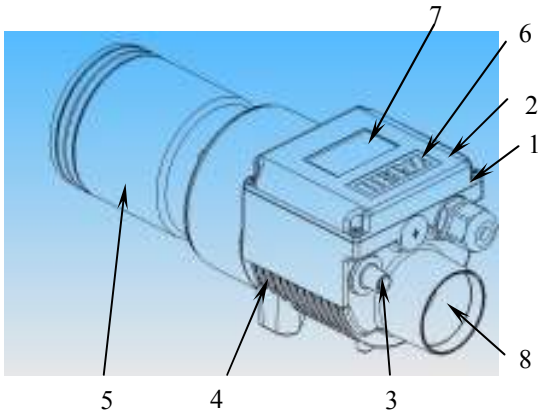

1. Screwed cable gland mains connection
2. Screwed cable gland control cable with external control
3. Potentiometer 0-9 (no potentiometer in devices without electronics and external control)
4. Mounting on underside of housing M 8 (useful thread length 16 mm)
5. Heater tube
6. Cover
7. Type plate
8. Air inlet

Connecting diagram

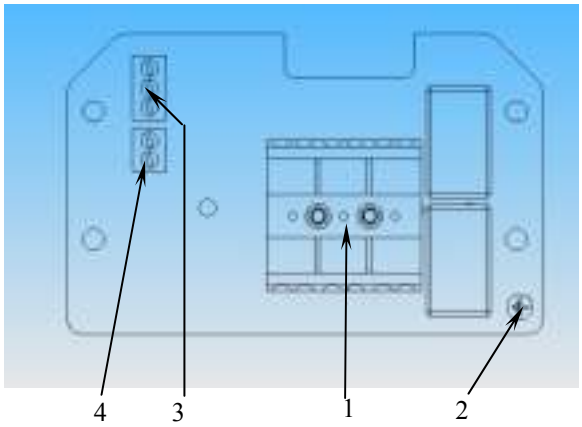

1. L1, N or L1, L2 or L1, L2, L3
   Mains connection acc. to type plate
2. ⏚ Protective conductor
3. 1 – 3 potential free change-over contact (48VAC, 1A)
   - 2 → 1 = break contact
   - 2 → 3 = normally open contact
4. +/- External temperature control via controller or PLC (PWM 12 – 24VDC, max. cycle time 1 second)

NOTE:
In the construction 400VAC – 2Ph the clamps L1, L2 and PE (protective conductor) will be connected exclusive. The clamp L3 is blocked by a wire jumper.
Devices without electronics, Clamps +/- and 1/2/3 not available!!!

Control cable for external control series S/M: - digital signal (PWM) 10-24VDC	+ = brown - = white
Control cable for external potentiometer (except Type XS):	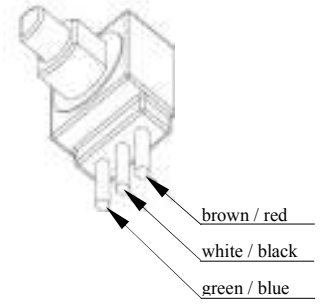
Compensation line with internal thermocouple type 'K':	+ = green - = white

Note for type L/XL:
After activating the tool protection trips, the air heater switches the power stack off. The build-in relais delivers a dry change-over contact at the clamps 1-3 (see connection diagram). A restart of the power stack is only possible after a reset (disconnection of the tool from the mains power).

Measures when activating the heating element or tool protection trips:
Disconnect the device from the mains power, after 3 seconds the device restarts automatically. Check air supply (air pressure, flow and filter), reconnect the device to the mains power.

INSTALLATION

1.0. INSTALLATION / Connection (only be conducted by a qualified person)
(thermal security class 1 according to EN 60519-1, paragraph 13.8)

1.1. When installing the tool, ensure that:
- the electric connection directs above a separator, which corresponds to the capacity (full disconnection with 3mm contact clearance, near to the device and easily gettable);
- the electrical protection is aligned to the nominal current.
- no (warm air) back pressure develops;
- the device is not positioned within the hot air jet of another device.

1.2. Protect the device from vibration and shock! Use absorbability at mechanical motion.

2.0. AIR SUPPLY

2.1. To protect the device and heating element the minimum air volume must flow. Never exceed the max. temperature. (Measured at the hottest point 3mm from the air outlet)
The heater must be switched off, if the inlet air falls below the minimum. This function should be included into the safety circuit of the equipment.

2.2. The max. temperature of the inlet air for the air heater may not exceed 50°C / 122 °F.

2.3. Pay attention to the direction of air flow!

Air heater Type XS and PN10:	**Air heater Type S, M, L and XL:**
2.4. When using compressed air, a pressure reduction valve and an oil and water separation unit must be in the supply.	2.4. Use BAK blowers for air supply (pay attention at the direction of rotation and the electrical connection).
2.5. The air flow can be adjusted by means of an air flow regulator.	2.5. For use in a dusty environment clean the filter of the blows regularly. When a critical dust problem exists (e.g. metal, electrically charged or damp dust) special filters must be used to avoid short circuiting in the tool.

3.0. OPERATION

3.1. Make sure that the hot air can flow freely. Warmth backflow can occur damage on the device (risk of fire!).

3.2. CAUTION: Pay attention to the minimum air volumes according to the technical data.

3.3. Allow the blower to cool the unit after using.

CAUTION: The device must never be operated without air supply!

Their installation and the working process shall only occur after observance of every safety arrangement for the provided place of installation and application. The accordance with the effective edition of the equipment and operations safety (GPSG) and the machine standards (MRL) must be guaranteed.

The air production, which is necessary for the application, shall be produced by an appropriate BAK blower.

STANDARD DESIGN

The air heaters Type S, M, L, XL und PN10 are equipped with control electronics and temperature adjustment with a built-in potentiometer as well as integrated heating element and device protection.

SPECIAL DESIGNS

Series PN10, S, M, L and XL:
- External Control by PWM signal
- External potentiometer
- Internal PID control with internal TC

Series S, M, L and XL:
- Internal TC

Series S and M:
- Up to a maximum for recirculation 75° C inlet air temperature (only devices WITHOUT electronics).

Series L and XL:
- Up to a maximum for recirculation 150° C inlet air temperature (only devices WITHOUT electronics).

Special voltages and performances.

Other special designs on request.

ACCESSORIES

Get the best results by using BAK-accessories and spare parts. Further information can be found in our brochures.

WARRANTY AND LIABILITY

Warranty and liability apply from the date of purchase (documented by the invoice/delivery note) according to the currently valid general terms of business of BAK. BAK refuses to honour any warranty for devices which are not in their original condition. BAK devices may never be reconfigured and/or modified.
BAK reserves the right to deny any responsibility if this is ignored. No liability can be assumed by BAK for incorrect installation and/or use as well as natural wear and tear of components (e. g. heating elements).

SERVICE AND REPAIR

The welding machine should be checked by an authorised service centre approx. every 1000 operating hours.
Repairs have to be carried out exclusively by BAK authorised service centres.
For repairs, please return the device appropriately packed for transport to your next BAK service centre.

INFORMATION AND ADVICE

The BAK – Group and their authorized Service Centres offer free advice and assistance for application technology.
Our experts will be pleased to assist you with your problems.

For after-sales service and orders please contact:

TECHSPAN GROUP - Plastic Welding & Process Heating

Australia : P 1-800 148 791 F 1-800 148 799

New Zealand : P 0800 603 603 F (09) 827 6596

E info@techspanonline.com W www.techspanonline.com

Illustrations and sketches may differ from the original device. Subject to changes without prior notice.